LONGJING®
Electric

LL10Z/T335 Limit Switch 行程开关

速动开关 LL10ZR 335-11Z、LL10ZR 335-02Z
缓动开关 LL10TR 335-11Z、LL10TR 335-02Z

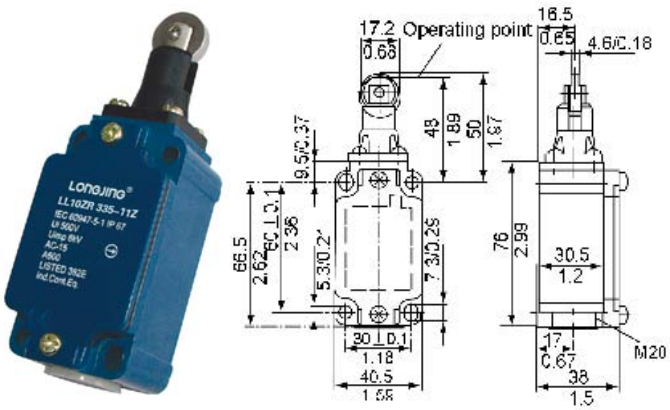

速动开关 LL10Z4VH 335-11Z、LL10Z4VH 335-02Z
缓动开关 LL10T4VH 335-11Z、LL10T4VH 335-02Z

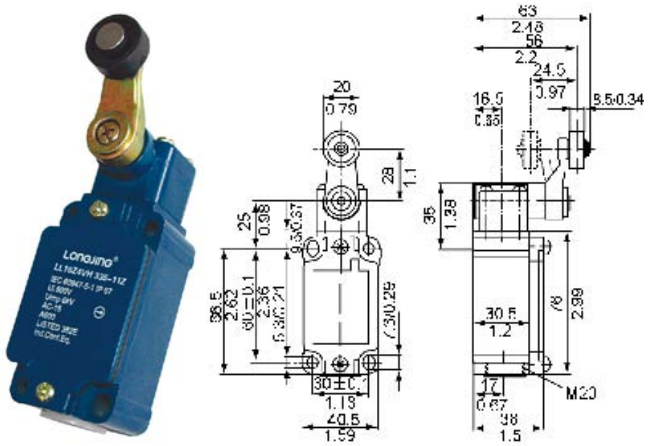

速动开关 LL10Z4V7H 335-11Z、 LL10Z4V7H 335 -02Z
缓动开关 LL10T4V7H 335-11Z、 LL10T4V7H 335 -02Z

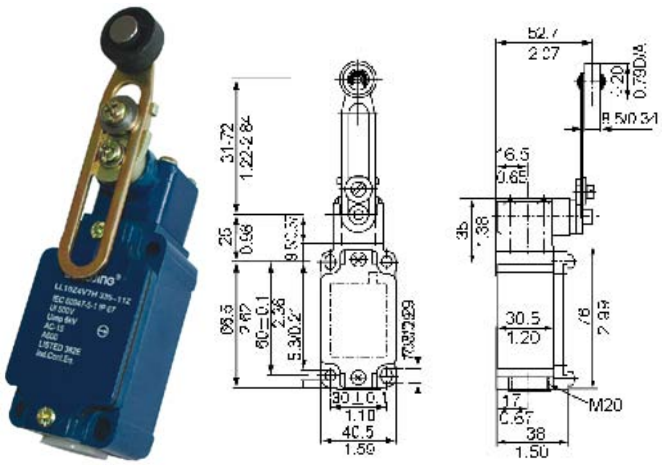

速动开关 LL10Z4V10H 335-11Z、LL10Z4V10H 335 -02Z
缓动开关 LL10T4V10H 335-11Z、LL10T4V10H 335 -02Z

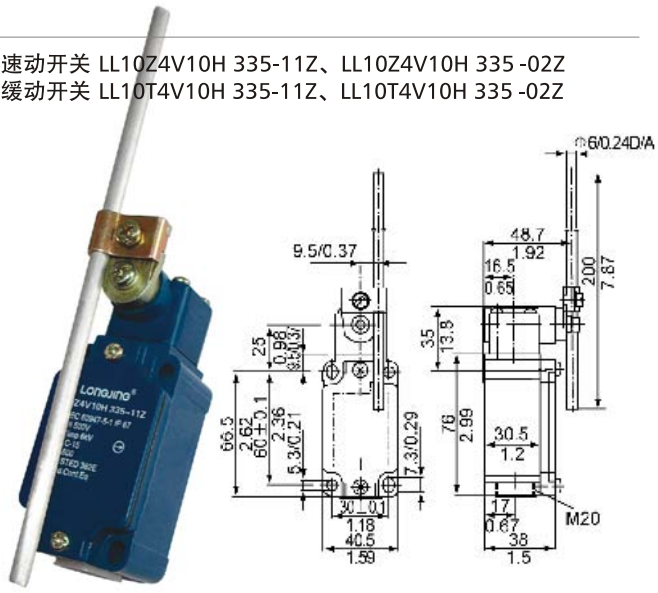

速动开关 LL10Z1K 335-11Z、 LL10Z1K 335 -02Z
缓动开关 LL10T1K 335-11Z、 LL10T1K 335 -02Z

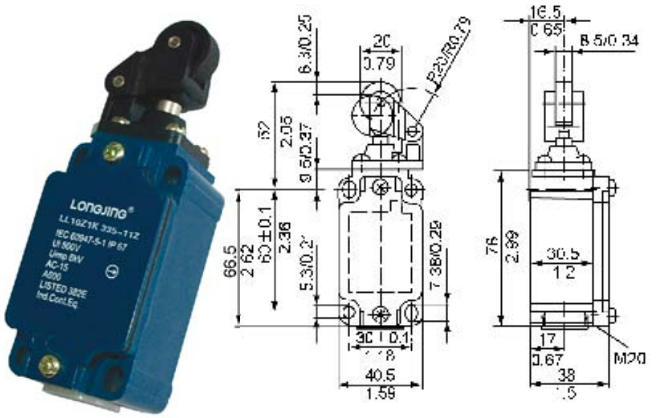
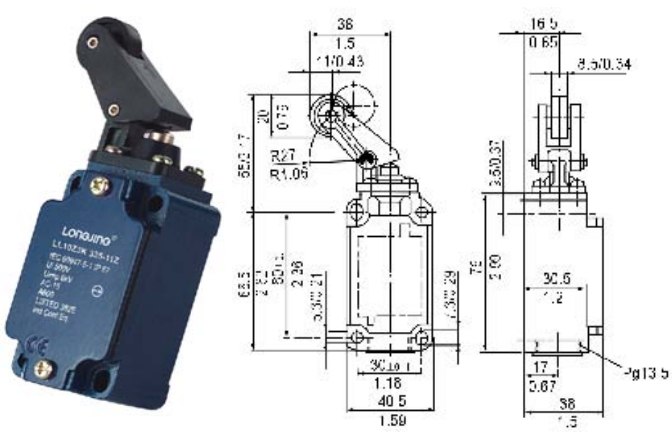
速动开关 LL10Z3K 335-11Z、LL10Z3K 335 -02Z
缓动开关 LL10T3K 335-11Z、LL10T3K 335 -0 2Z